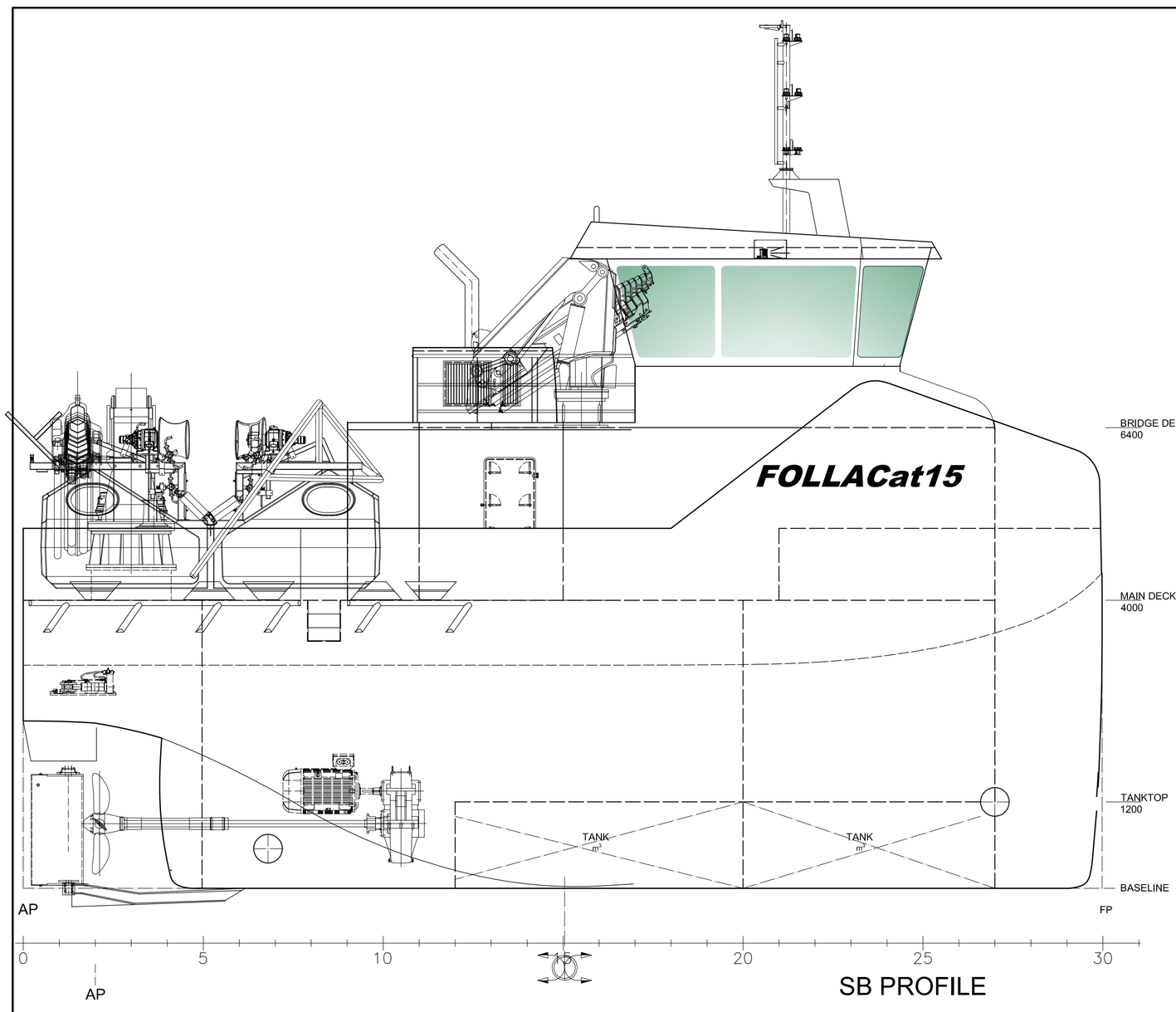

SB PROFILE

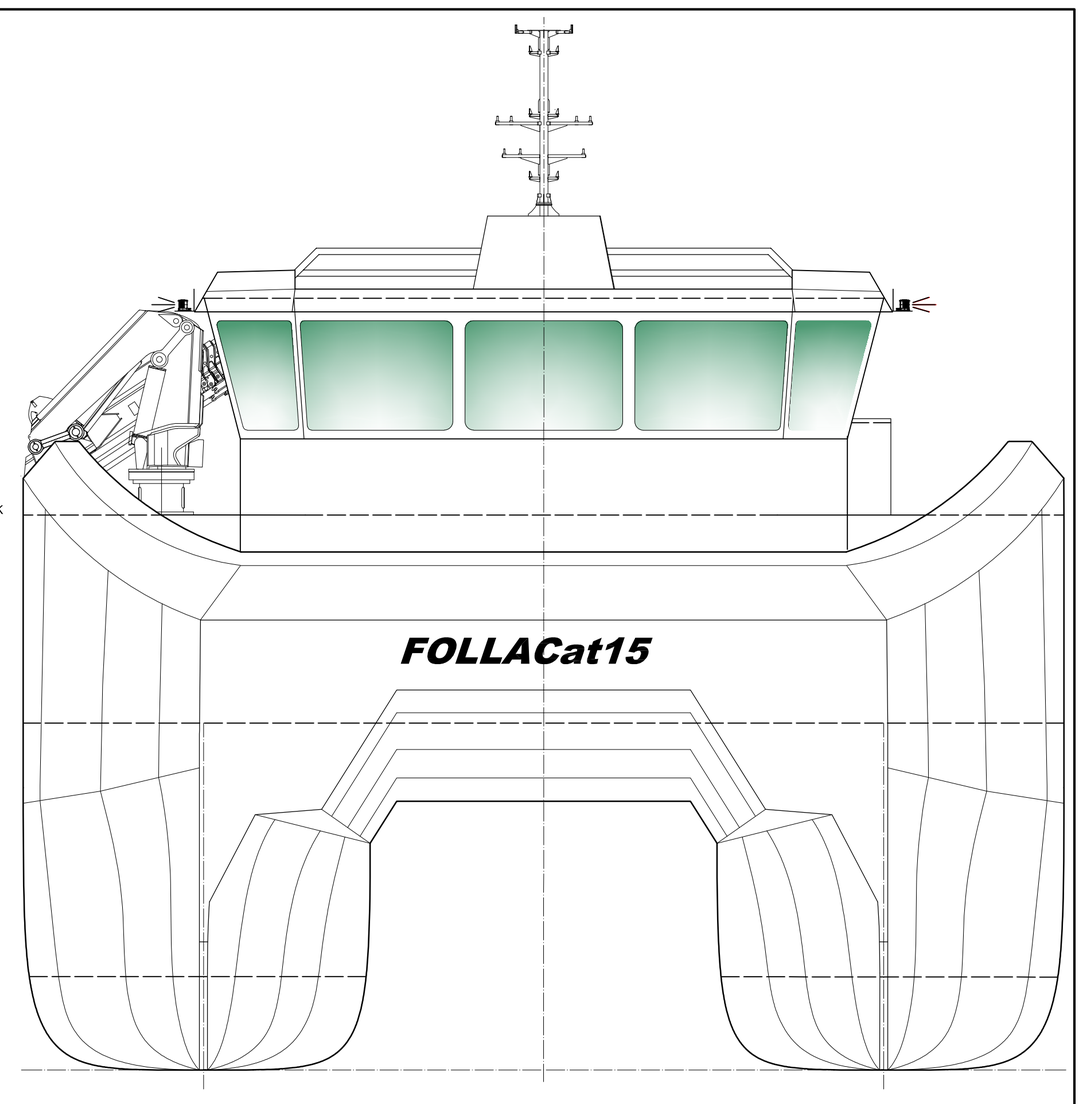

FRONT VIEW

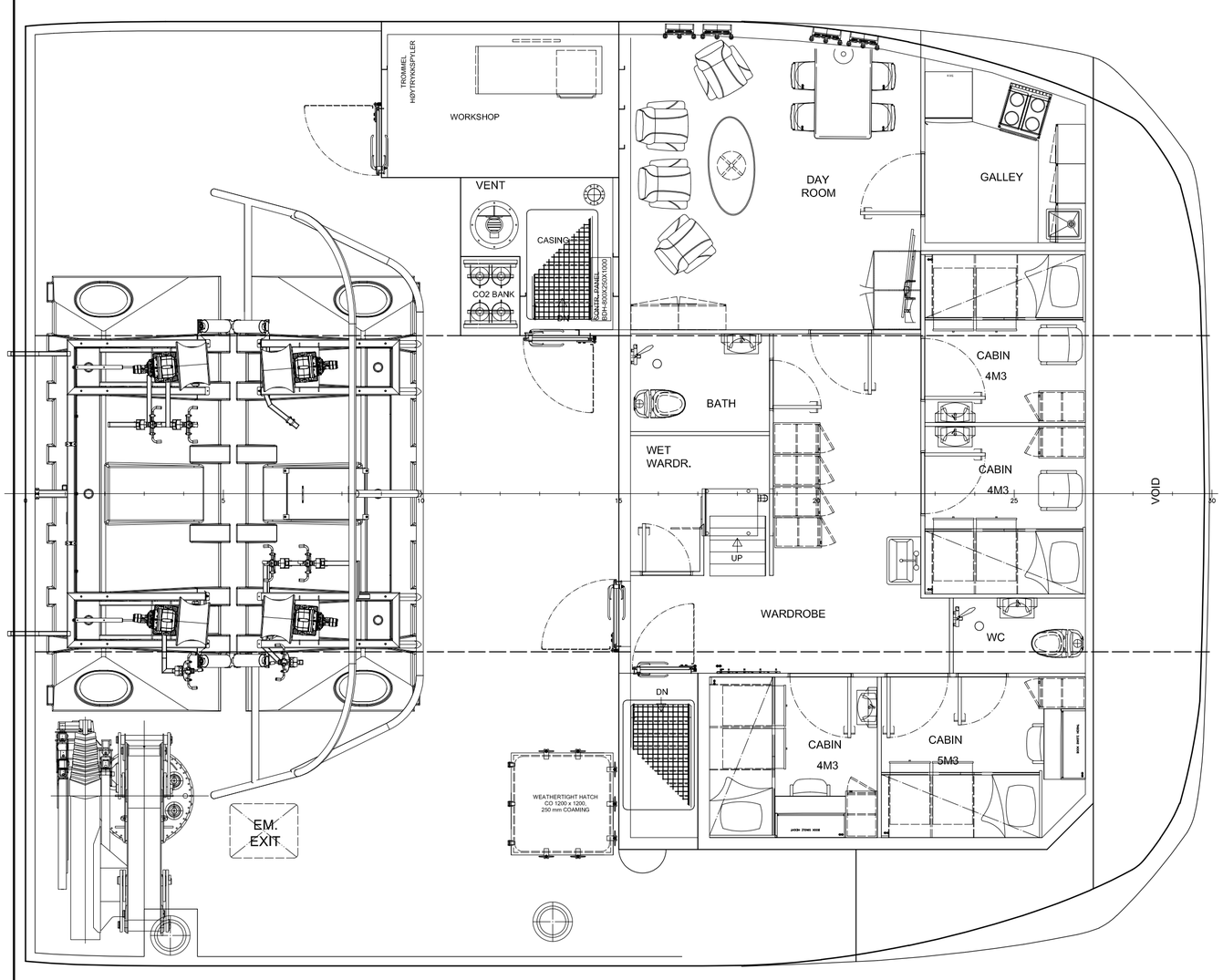

MAIN DECK

4000

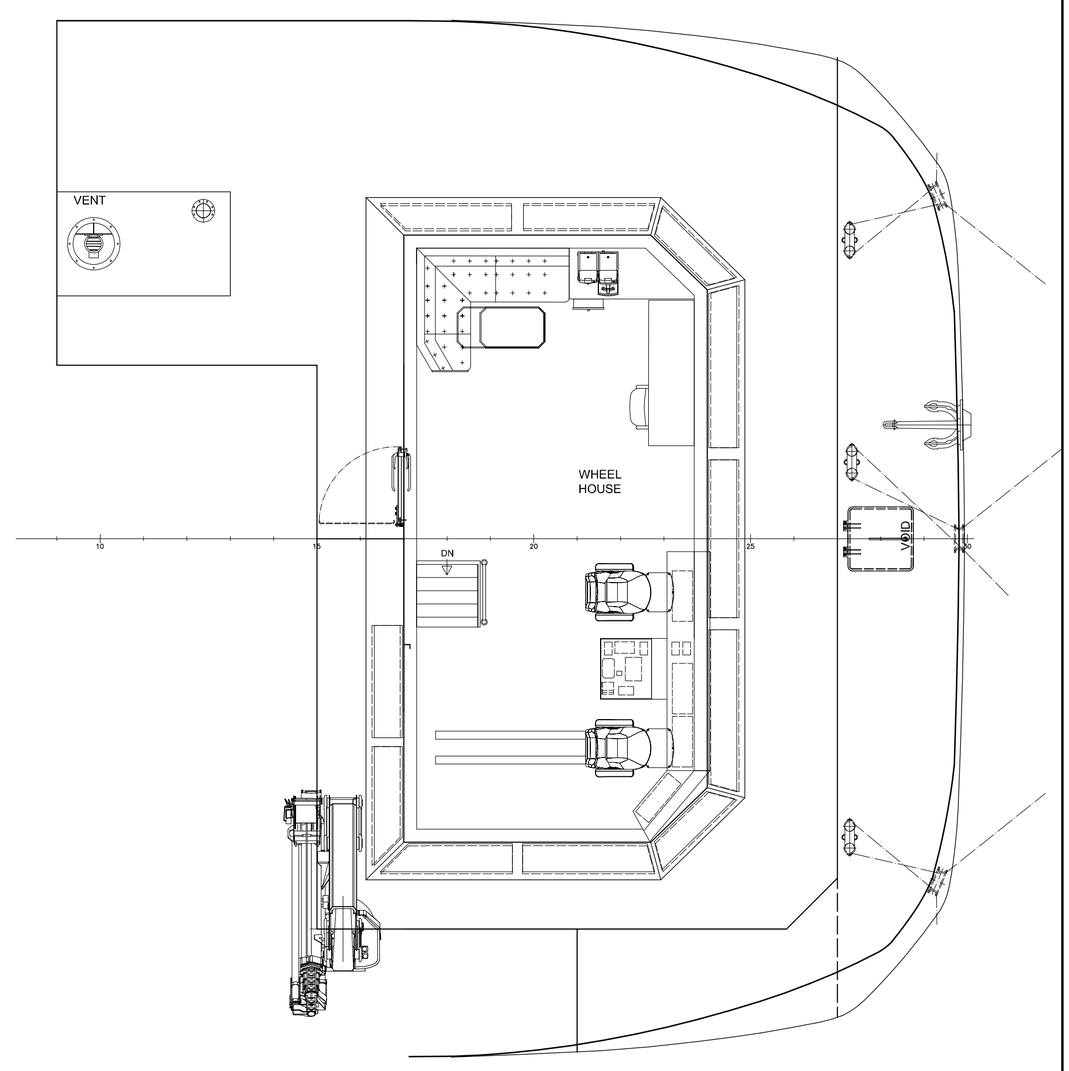

BRIDGE DECK

6400

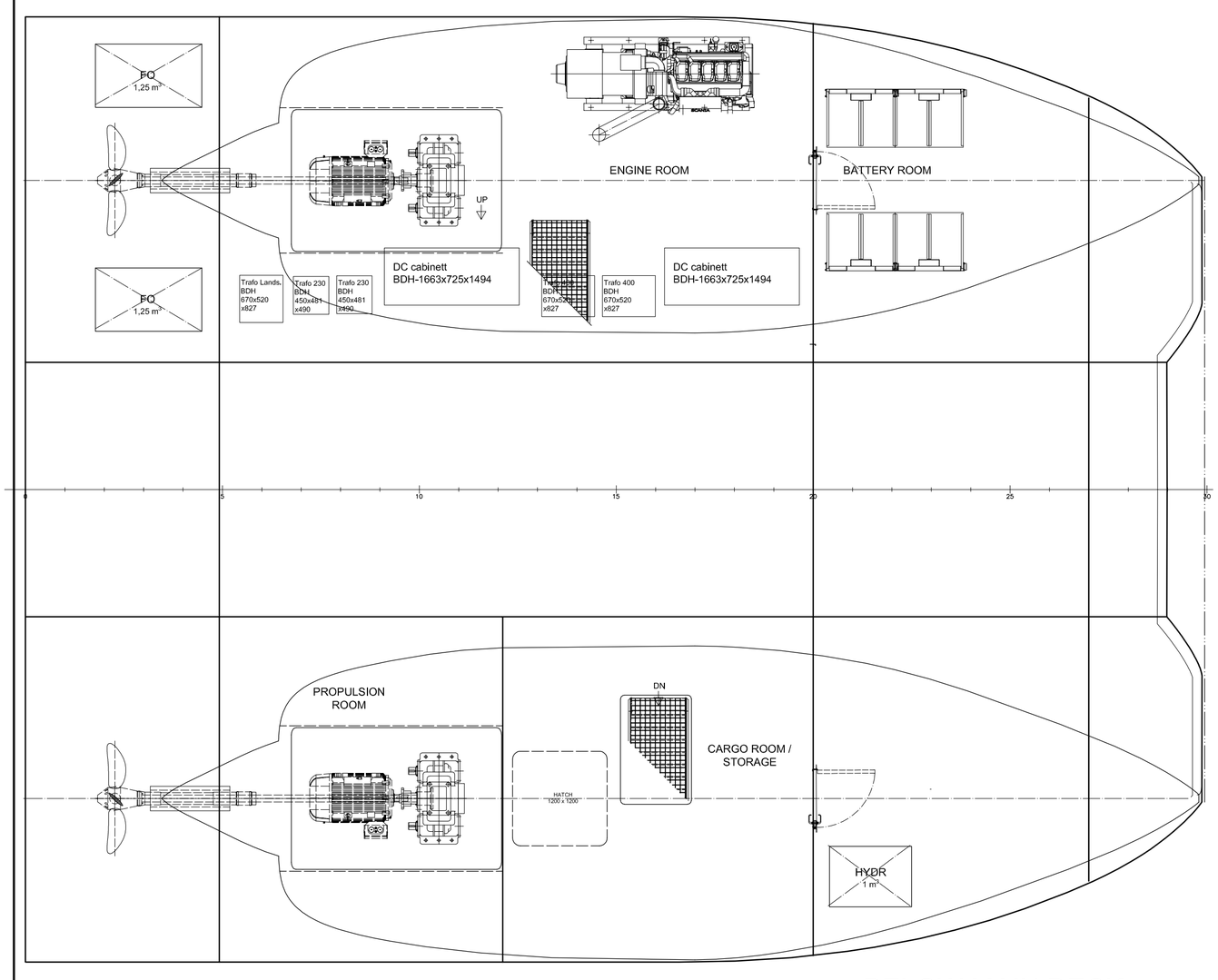

BELOW MAIN DECK

1200

MAIN PARTICULARS

LENGTH OVER ALL (LOA)	:	14,90 m
LENGTH BETWEEN P.P. (LPP)	:	14,50 m
BREADTH MLD	:	12,00 m
DEPTH TO MAIN DECK	:	4,00 m
DEPTH TO DESIGN WL	:	3,00 m
FRAME SPACING	:	0,50 m

CAPACITIES

BATTERY PACK	:	361 KWh
FUEL OIL	:	2,5 m^3
FRESH WATER	:	5 m^3
WATER BALLAST	:	15 m^3
SEWAGE TANK	:	1 m^3
GROSS TONNAGE	:	>100 GT

REV	ALTERATIONS	DATE	SIGN.	REV	ALTERATIONS	DATE	SIGN.
A	FOR COMMENT	13.06.22	VJ	B	Changed acc. to comments	13.09.22	VJ

YARD NO/NAME: YARD No.xx FOLLA MARITIME

BLOCK

CLIENT (NAME/LOGO)

GENERAL ARRANGEMENT
FOLLA CAT 15

DEP.	MM PRO. 3152	MM DWG. NO 3166-101-001	SCALE 1:50
DATE MAY22	APPR.		
DES. VJ	CHK.	FILE 3152-101-001	

YARD DWG. NO

REV B | SFI 101

SHEET 1/1 | FORMAT

TO REPLACE

REPLACED BY

INFO

DATE

REV APPROVED BY

møre maritime
Dalegaten 137
N-6518 Kristiansund, Norway
Tel.: +47 71 58 30 00
E-mail: post@moremaritime.com

ALL RIGHTS RESERVED!
This drawing is the property of Møre Maritime AS.
It may not be copied or forwarded to any third party without our written consent.
The receipt of this drawing implies that the above conditions are accepted.